TOILET BRUSH

CODE 16915.B

Toilet brush

· Toilet brush made of Stainless steel AISI 304 & frosted glass.
· Durability and resistance against corrosion.
· Suitable for public areas.
· Polish finished

TECHNICAL DATA

· Made of Stainless steel AISI 304.
· Dimensions: 310 height x 158 width x 121 depth mm.
· Equipped with fixing materials.
· Maintenance: stainless steel needs maintenance because dust can eventually damage the chrome in stainless steel. We recommend monthly cleaning with a stainless steel special product.

SUGGESTED TEXT FOR PRESCRIPTION

NOFER or similar toilet brush, made of polish finished AISI 304 stainless steel & frosted glass. Dimensions: 310 height x 158 width x 121 depth.

TECHNICAL DRAWING

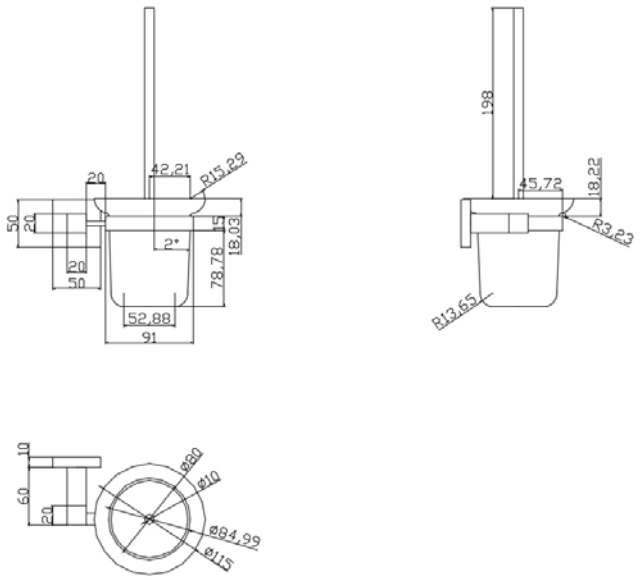

NOFER S.L.
Avenida de la fama, 118
08940 · Cornellà de Llobregat (Barcelona)
Tel +34 934 742 423 · Fax +34 934 743 548
export@nofer.com · www.nofer.com

Related Products

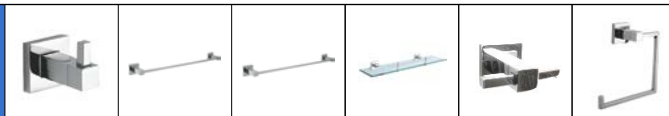

16906.B | 16901.B | 16902.B | 16910.B | 16907.B | 16905.B